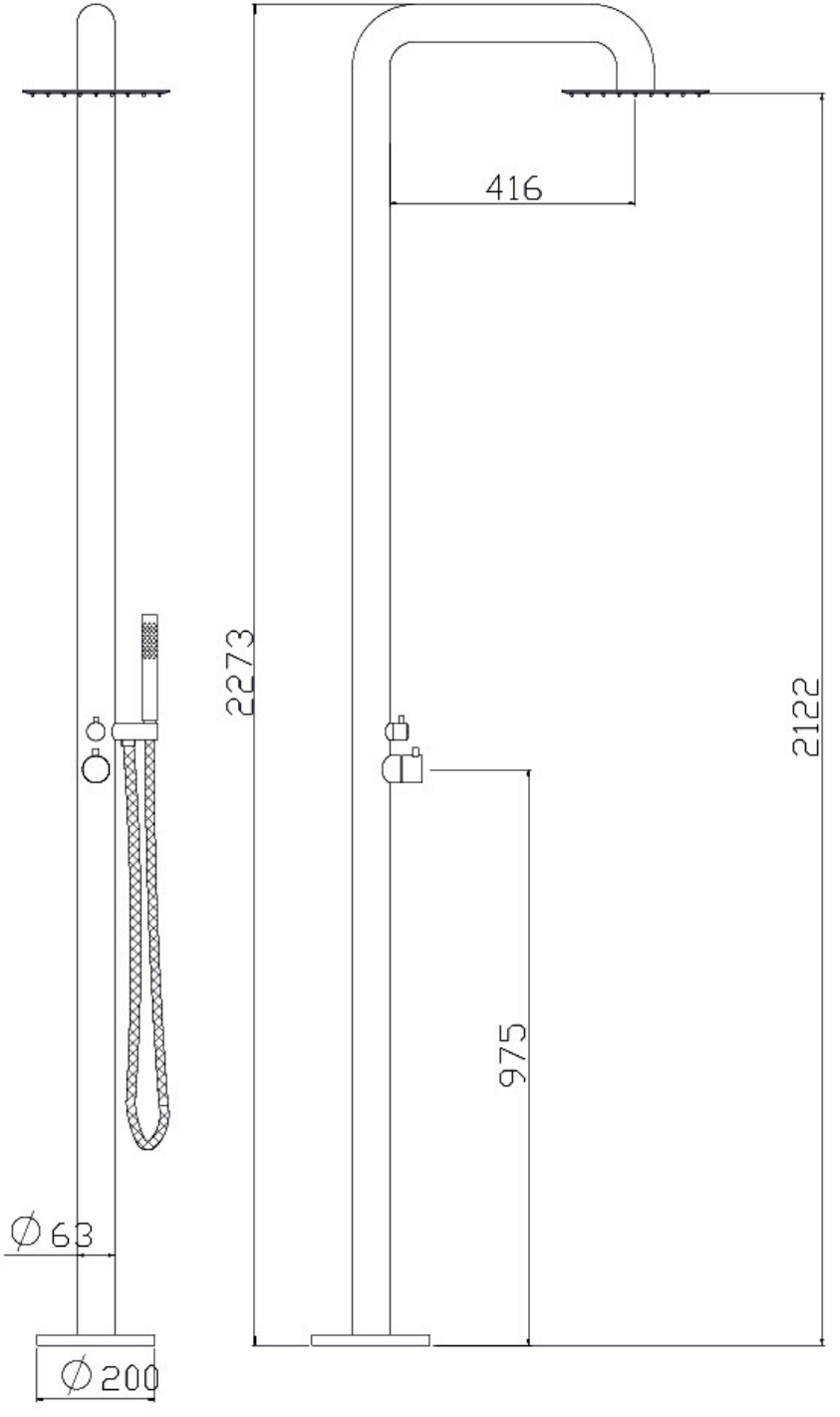
416
2273
2122
975
∅63
∅200